1-800-779-2102

Mon – Thurs: 8:00am - 5:00pm | Friday: 8:00am - 4:00pm CST

INSPECT YOUR PRODUCT FOR DAMAGE & MISSING PARTS BEFORE PROCEEDING TO INSTALLATION

PROCEDURE FOR RETURNS OR MISSING HARDWARE

-PLEASE CONTACT THE ORIGINAL POINT OF PURCHASE FOR:
SHIPPING DAMAGE, RETURNS, OR WARRANTY CLAIMS

-CONTACT DEE ZEE DIRECTLY FOR MISSING PARTS OR HARDWARE

WWW.DEEZEE.COM

REGISTER YOUR PRODUCT ONLINE: **www.deezee.com/registration**
VIEW INSTRUCTIONS ONLINE: **www.deezee.com/instructions**

⚠WARNING: Cancer and Reproductive Harm
www.P65Warnings.ca.gov

Operating, servicing, and maintaining a passenger vehicle can expose you to chemicals such as lead, phthalates, engine exhaust, and carbon monoxide that are known to the State of California cause cancer and birth defects or other reproductive harm. To minimize exposure, service your vehicle and its accessories in a well-vented area and wear gloves or wash your hands frequently.

DEE ZEE, INC. WARRANTY AGREEMENT

Dee Zee, Inc. guarantees the original purchaser a limited lifetime warranty against manufacturer defects in materials, workmanship, and design under normal use, excluding damage resulting from road hazards such as gravel or other debris, product misuse, improper installation, impairments from accidents, product modifications, improper repairs, spills, vandalism, product neglect, or acts of God.

This warranty applies only to the original purchaser of new product(s) and is limited to the replacement of genuine Dee Zee products. Modification of any kind to Dee Zee products voids all warranty coverage. Warranty does not include electrical components, installation, cost of removal, labor, transportation costs, loss of use, inconvenience, or consequential damages.

WARRANTY COVERAGE - MATERIALS & WORKMANSHIP

***LIMITED LIFETIME WARRANTY*:**

- *STAINLESS STEEL*: Side Steps, Grill Guards, Bull Bars, Bed Caps, and Side Rails
- *ALUMINUM*: Side Steps, Running Boards, Storage Boxes, Transfer Tanks, Bed Protection, Side Rails, Invis-A-Racks, and Cab Racks
- *PLASTIC*: Storage Boxes
- *OTHER*: Front and Rear Bumpers

***THREE-YEAR WARRANTY*:**

- *POWDER-COATED / E-COATED STEEL*: Side Steps, Running Boards, Storage Boxes, Transfer Tanks, Cab Racks, Sport Bar Ladder Racks, Cargo Carriers, Mounting Brackets (NX, Rough Step, and Bumper Guards only)
- *OTHER*: Tailgate Assist, Bed Mats, Floor Mats, Auxiliary Fuel Connection Kits, and All Products Not Otherwise Listed Individually

WARRANTY COVERAGE – FINISH PROTECTION

The finish of all Dee Zee products is covered for *one-year* (1) from the date of purchase. Dee Zee products have a high quality finish that must be cared for and maintained like any other exposed finish on the vehicle. Protect the finish with non-abrasive automotive wax (e.g. Pure Carnauba) on a regular basis. Applying soaps, polishes, or waxes that contain an abrasive compound may scratch the finish and leave the exposed material susceptible to corrosion.

WARRANTY COVERAGE – COMPONENT PARTS

Operational items such as shocks, latches, hinges, and wear items including, but not limited to, mud flaps, step pads, toolbox tray, end caps, hardware, seals, etc. have a *one-year* (1) warranty. Replacement component parts can be ordered via credit card (MasterCard or VISA) by calling 1-800-779-2102. All replacement parts are non-returnable and non-refundable.

GPI® FUEL PUMPS & ACCESSORIES

All Great Plains Industries (GPI) products, including transfer tank pumps and fuel meters are covered by GPI's warranty policies. Dee Zee's warranty terms do not apply to GPI products. To submit a warranty claim, please contact GPI at 1-800-835-0113 or visit www.gpi.net.

WARRANTY SUBMISSION PROCEDURE

All warranty claims will be initiated at the place of purchase. The original purchaser will be required to present the original sales receipt with purchase date shown and provide photographs of the defect.

In the event the originally purchased product style is no longer available, Dee Zee will warranty the defective part with a current equivalent. If a comparable product is no longer available, the product would be returned to the store of purchase for a refund or the applicable cost difference can be paid to choose an alternate style.

DISCLAIMER

All products are sold as appearance accessories and should not be relied upon as protection for the vehicle or its occupants in the event of an accident. Vehicles equipped with a supplemental restraints system (air bags) deployed by impact and collision avoidance systems should not be modified in any way. Always consult the vehicle manufacturer if you have any questions regarding supplemental restraint systems and sensors.

Buyer must accommodate front and rear sensors during product installation and assumes all risk should these be tampered, rerouted, severed, or disconnected. This includes disabling visual, audio, or vibration alerts into the cab. Buyer assumes all risk and responsibility for wiring any supplemental auxiliary lights.

Buyer assumes all risk, liability, and cost for the installation and use of Dee Zee products. Dee Zee, Inc. assumes no liability for injury, loss, incidental or consequential damages in the event of an accident.

Thank you for choosing Dee Zee to add function and accessorize your vehicle. Dee Zee has been a staple brand in the truck accessory market since 1977 and we hold a reputation of quality manufacturing based in America's Heartland. Our products are born through careful engineering and backed by industry leading warranty programs. We appreciate the opportunity to serve you and your vehicle!

Review the instruction pages in their entirety to prepare the required tools

Warning: Please check for wiring or other obstructions before drilling any holes in the vehicle. If it is necessary to drill any holes, Dee Zee recommends putting a sealant or rust inhibitory around all holes drilled into the body of the vehicle.

It is the sole responsibility of the vehicle owner to check for tire clearance. It is unlawful and dangerous to ride on any external vehicle step while the vehicle is in motion.

Cleaning: To be entitled to all warranty rights offered with the product, Dee Zee steps need to be cleaned regularly with a mild detergent. Do NOT use abrasive cleaners. For stainless steel products, the application of a high grade automotive wax is recommended.

DZ 1034
Chevy Express Van – Front Doors Only

A 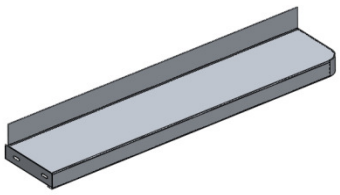 BD 1034LP/RP X1/X1	**B** 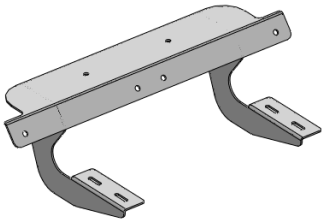 B 1780P X2	**C** Mud Flap 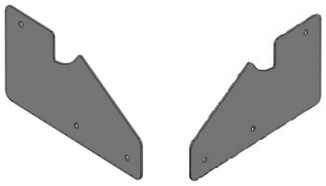 FP0321P/2P X1/X1	**D** Gasket 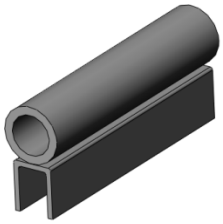 GSK-41 6.25’
E 3/8 threaded plate 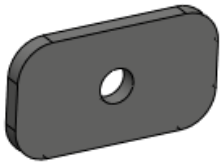 PN 407 X6	**F** 3/8 bolt 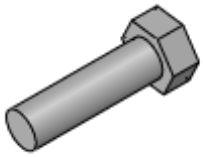 PN 114 X6	**G** 3/8 washer 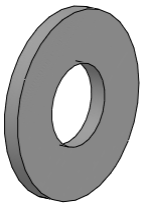 PN 113 X6	**H** ¼ sheet metal screw 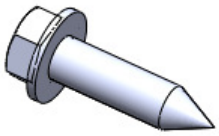 PN 97 X4
I ¼ bolt 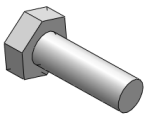 PN 70 X6	**J** ¼ nut 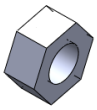 PN 71 X14	**K** ¼ washer PN 72 X20	**L** ¼ carriage bolt 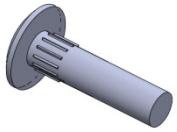 PN 87 X8

Tools Required

Ratchet / Wrench
9/16”
7/16”
3/8”

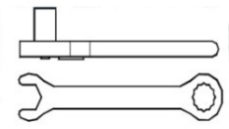

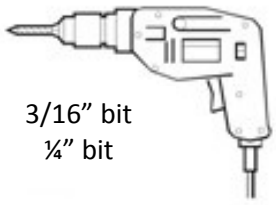

3/16” bit
¼” bit

1

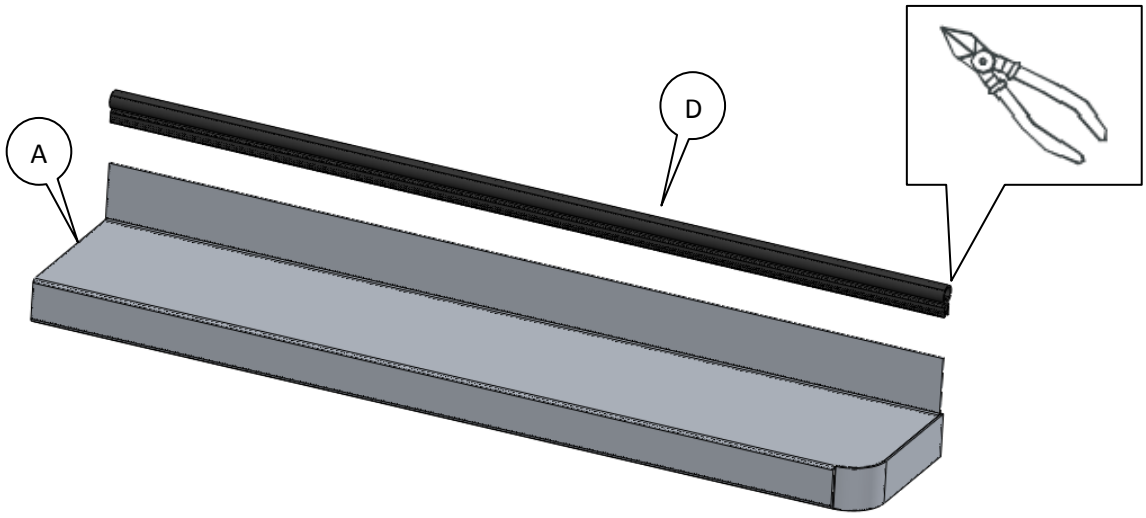

2

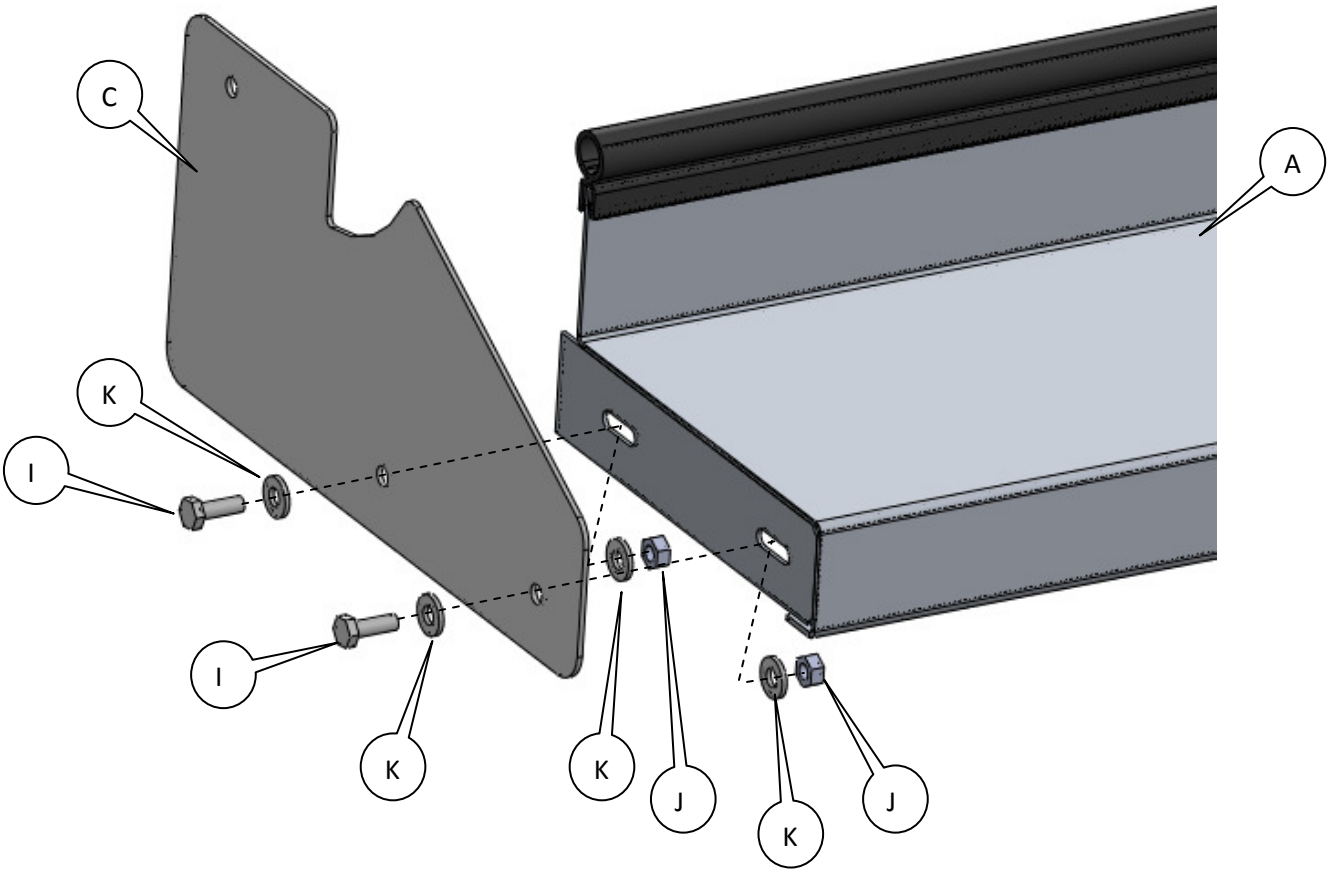

3

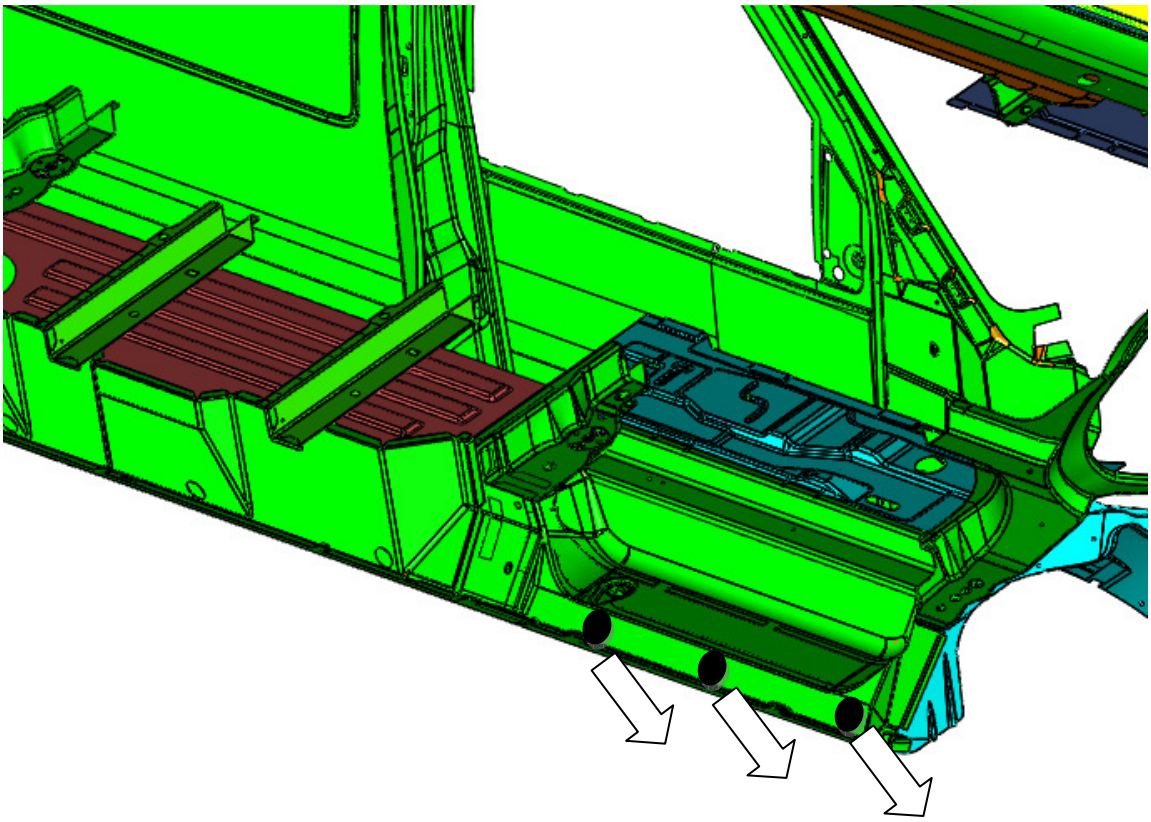

4

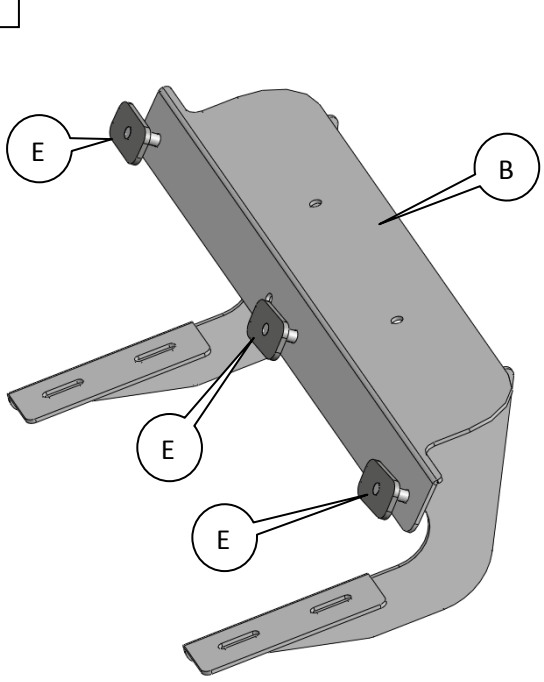

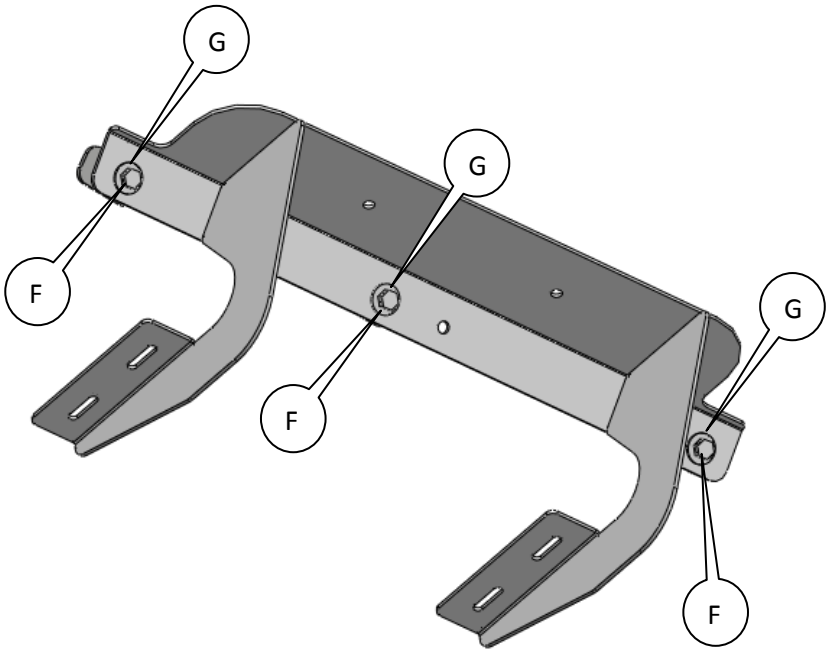

5

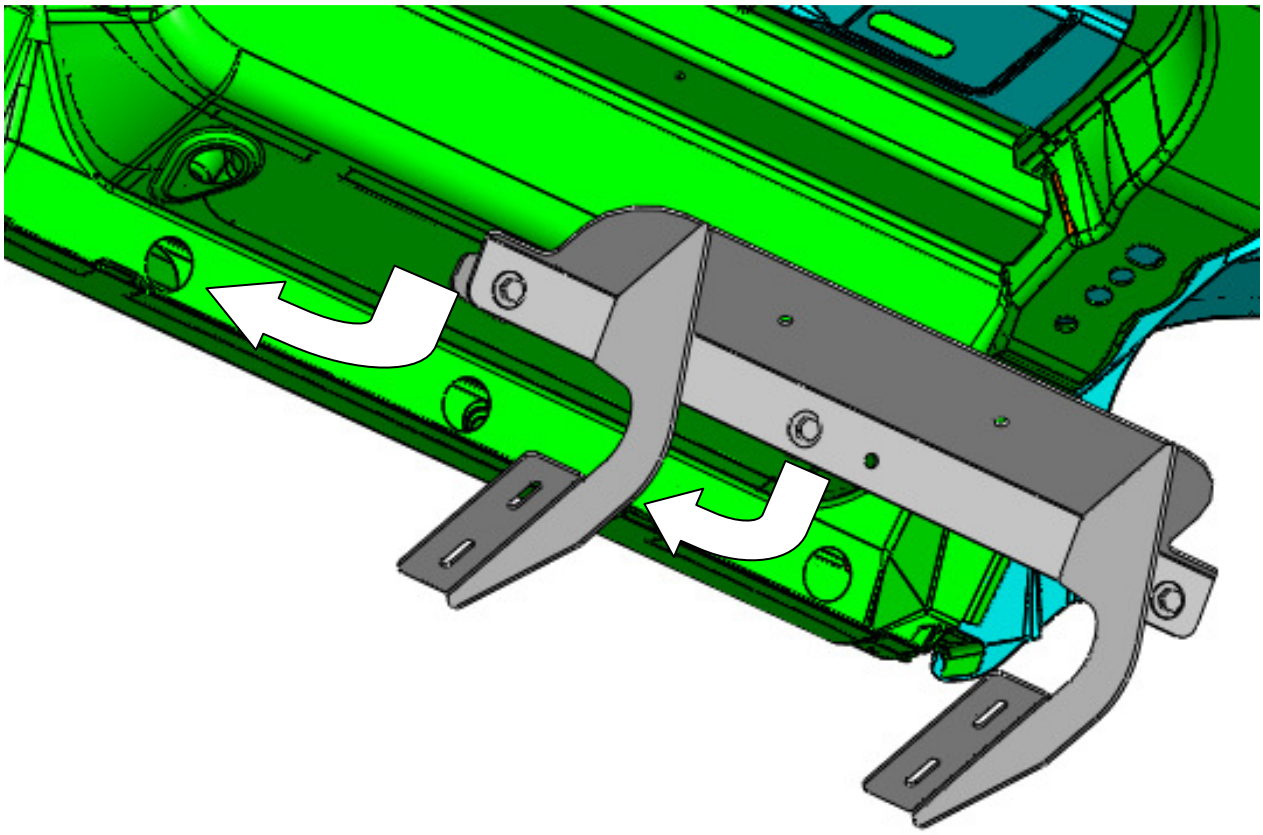

6

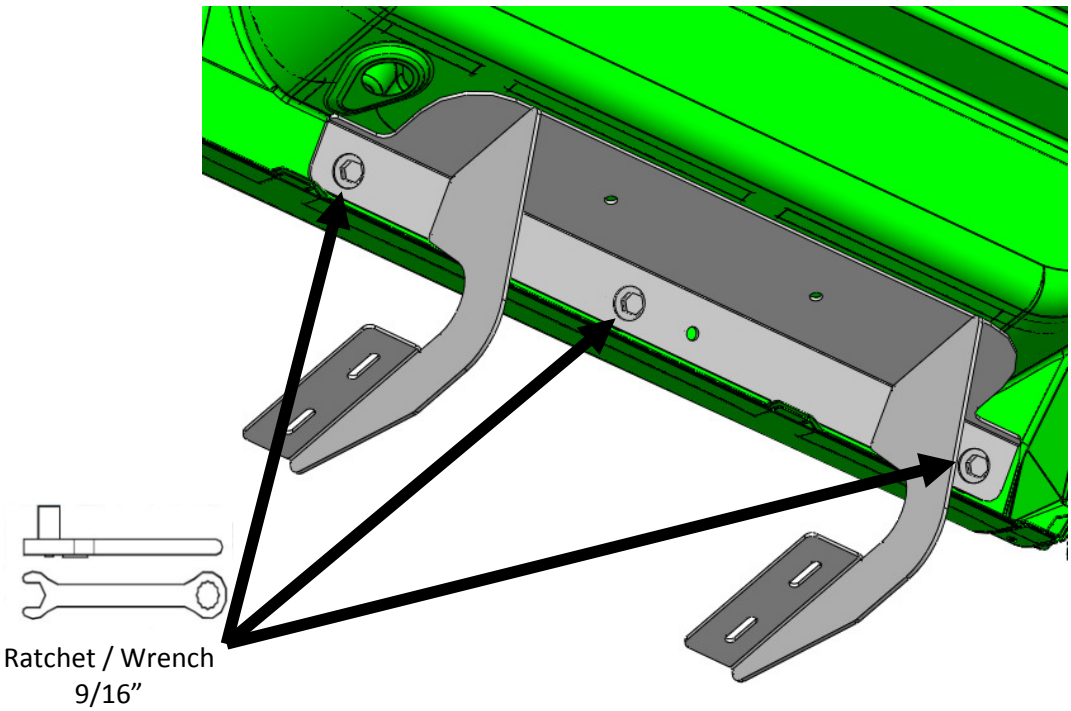

Ratchet / Wrench
9/16”

7

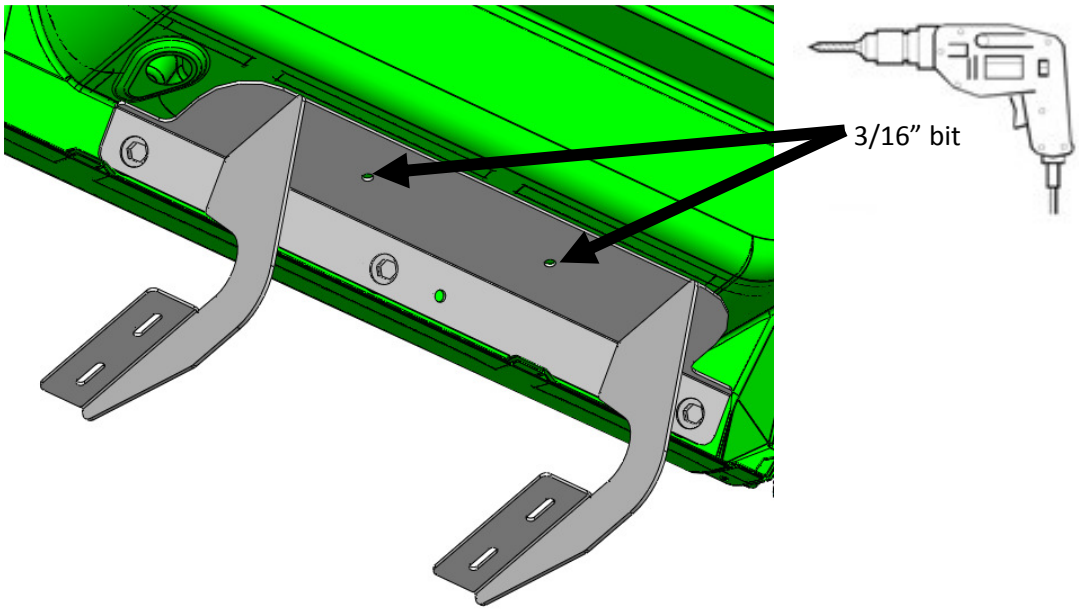

8

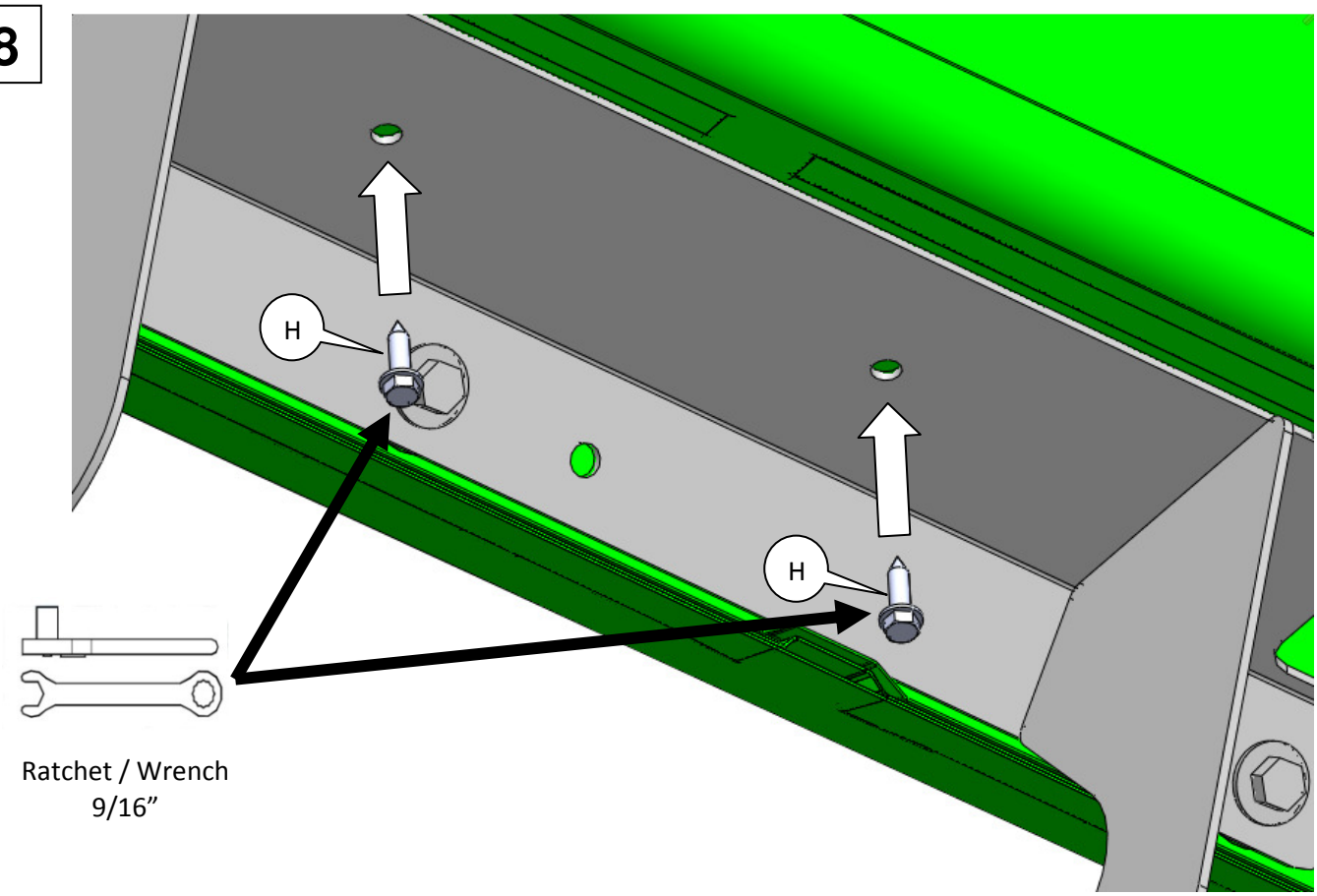

Ratchet / Wrench
9/16”

9

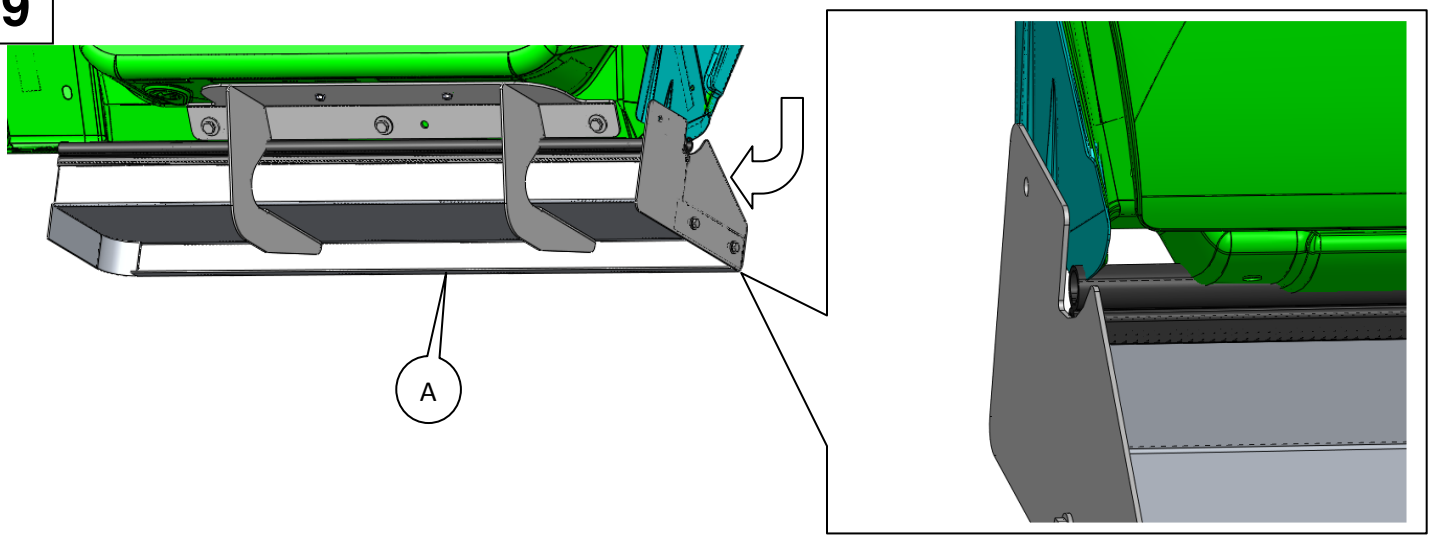

10

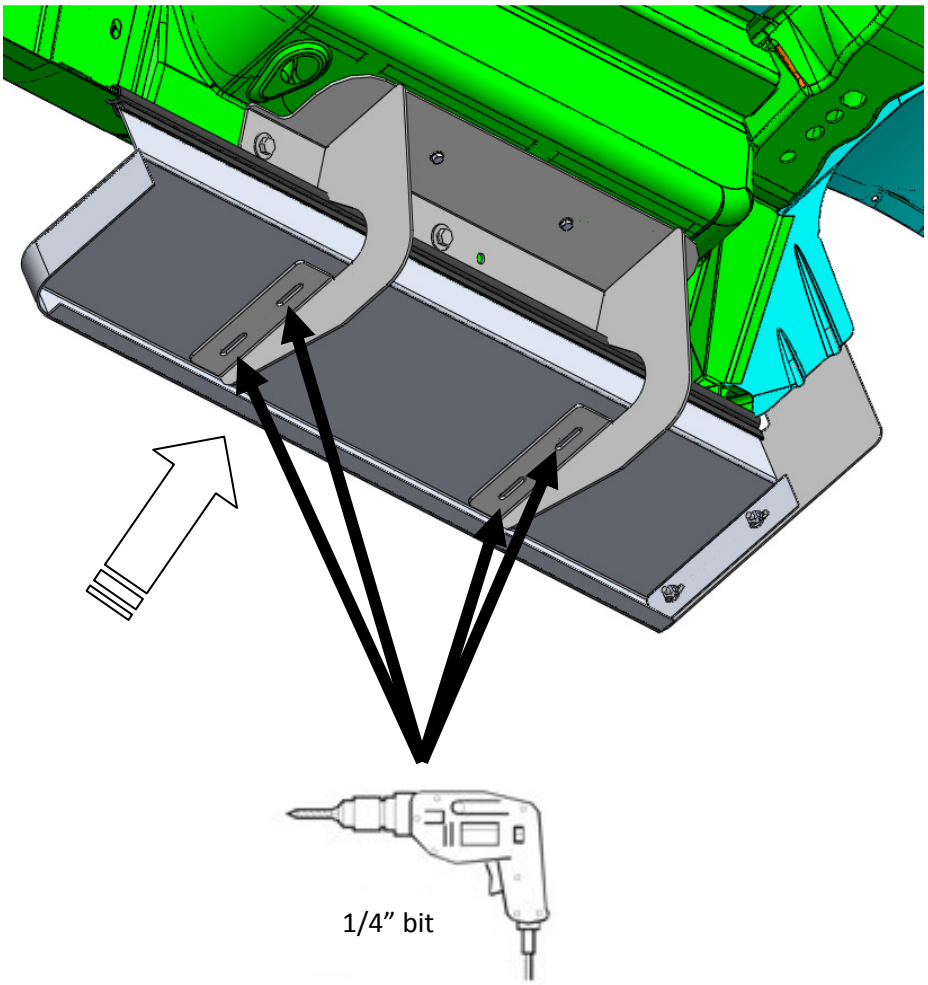

11

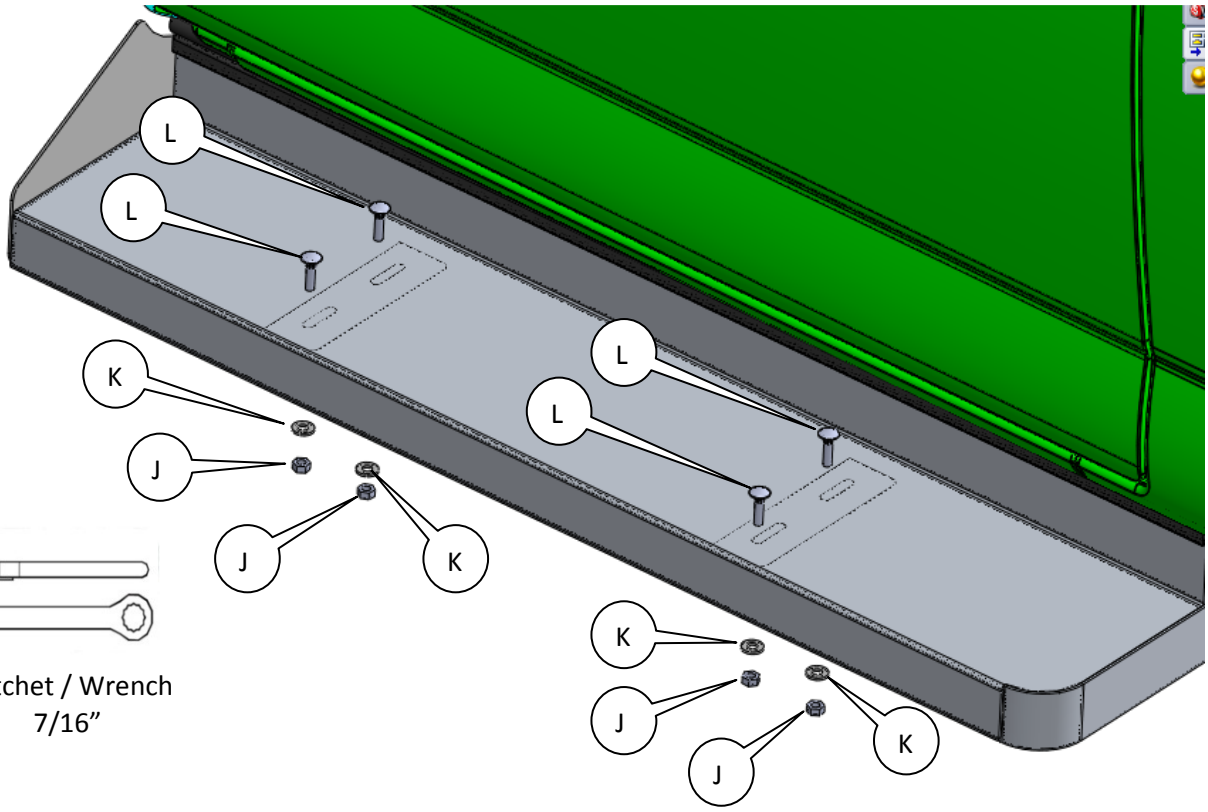

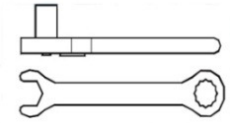

Ratchet / Wrench
7/16”

12

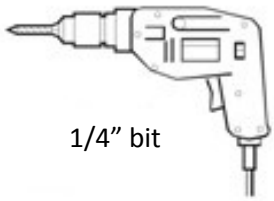

1/4” bit

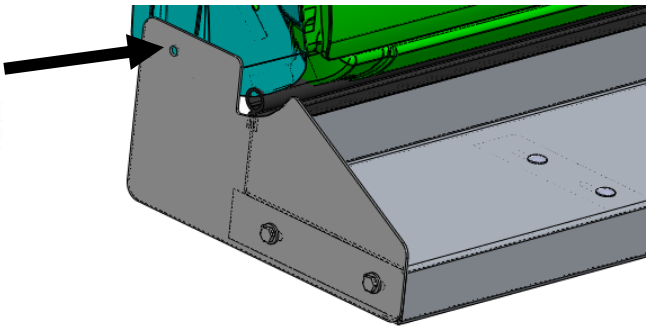

13

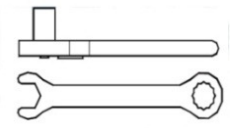
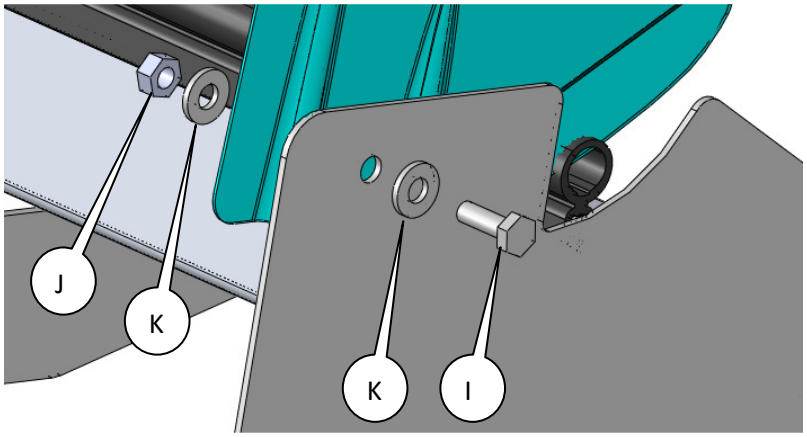
Ratchet / Wrench
7/16”